emco group

Designed for your profit

E[M]CONOMY means:

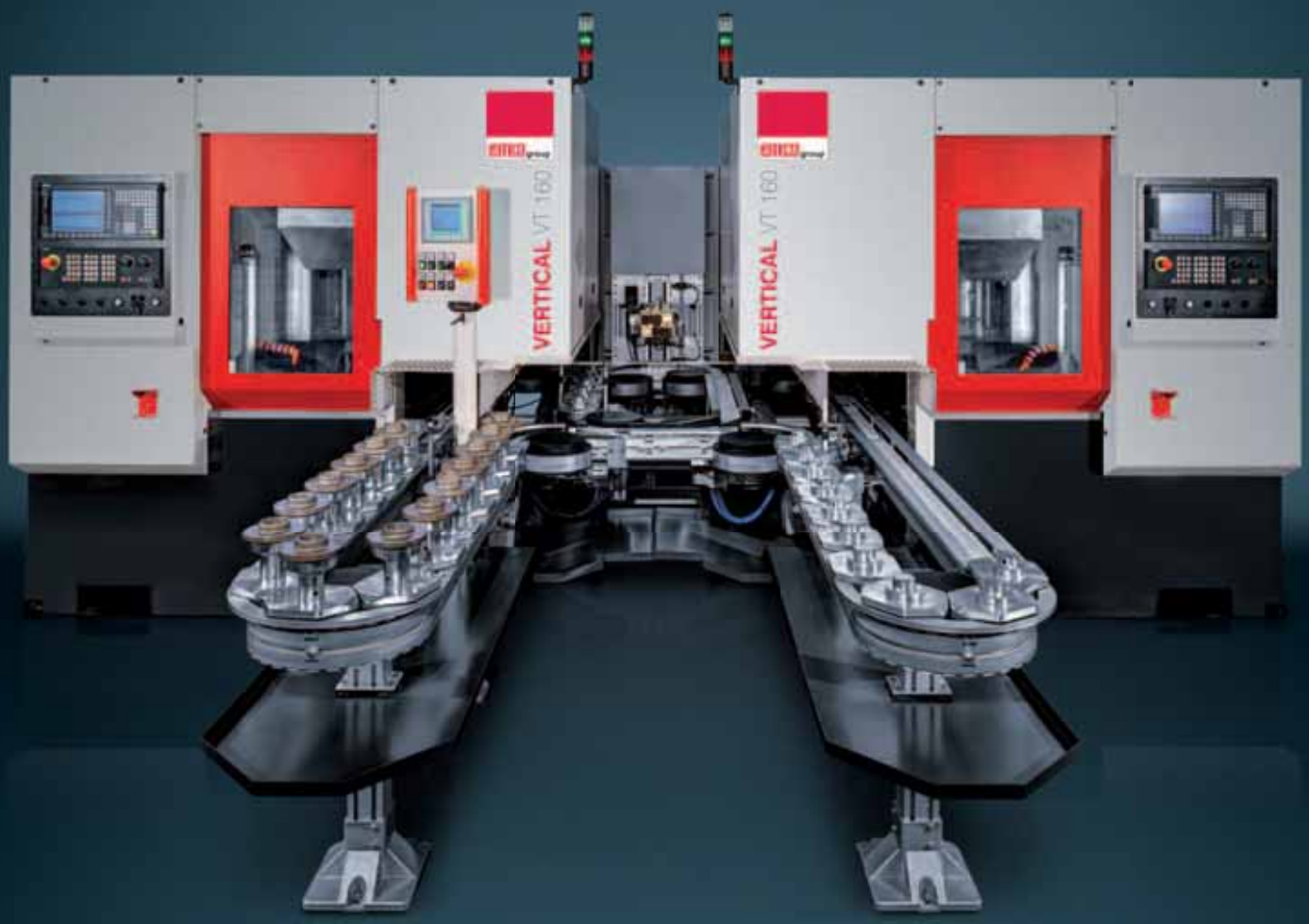

Maximum efficiency at a great price
VT 400 - VT 260 - VT 160

Vertical turning machines with integrated automation

EMCO VERTICAL VT 160

High-performance turning with the EMCO VT 160

The VT 160 is equipped with a highly dynamic drive unit and high-performance main spindle. The integrated pick-up system with "two track loading" makes for a good supply of parts and short cycle times. This guarantees short chip-to-chip times (up to 5.5 seconds in the case of two track loading) and optimized productivity.

[Main spindle and drive unit]

- Highly dynamic main spindle up to 7000 rpm and Sinamic drive unit
- Energy-efficient modular design

[Work area]

- User-friendly work area
- Optimized access to the clamping equipment, workpiece and tools

[Control]

- Simple programming and operation thanks to the state-of-the-art control technology
- Sinumerik 828D with Shopturn dialog programming and Sinamics drives

[Right-hand machine]

[Chip conveyor]

- Guarantees optimized chip removal
- Chip conveyor (hinge type belt) with integrated coolant device as standard

[Machine stand]

- An enclosed, compact system with an extremely small footprint: 8,5 m²
- Quick and easy to set up by means of the crane-hook principle

[Tool turret]

- VDI30 12-position turret with and without a milling drive
- Multifunctional plate for stationary boring tools, milling unit and special tools

[Automation]

- Two-track loading, good parts supply and short cycle times
- Individual customer requests, such as pallet belts, towing frame, chain timing belts and the integration of feed systems can be implemented quickly and easily

[Engineering]

Highlights

- Highly dynamic drive unit
- Two track loading, quick and flexible automation with short cycle times
- Chip-to-chip times up to 5.5 sec.
- Small footprint
- Strong guide rail concept for maximum stability / size 45
- Driven tools and Y axis +/- 65 mm
- Latest Siemens control unit
- Made in the Heart of Europe

Options

- Workpiece gauges
- Multifunctional plate
- Process monitoring
- Switchgear cabinet cooling
- Linear measuring systems
- Oil mist separator

Power

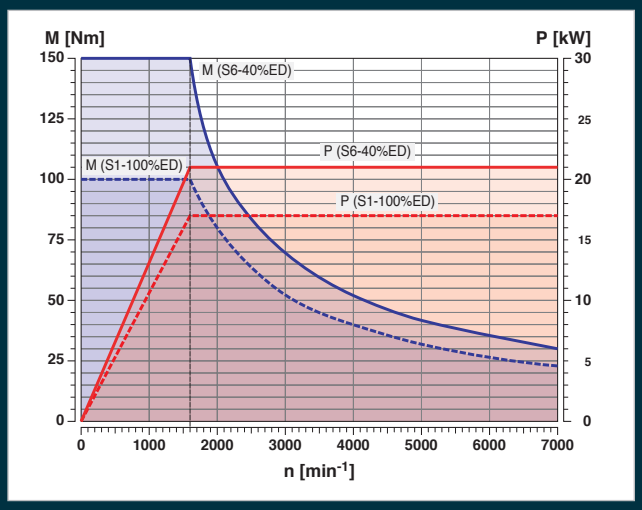

Motor characteristics for main spindle

EMCO VERTICAL VT 160 VERSIONS

EMCO VERTICAL VT 160 (ISM) – Basic machine without driven tools and integrated spindle motor

EMCO VERTICAL VT 160 M (ISM) – Basic machine with driven tools and integrated spindle motor

EMCO VERTICAL VT 160 MY (ISM) – Basic machine with driven tools, Y axis and integrated spindle motor

EMCO VERTICAL VT 260

Designed for heavy-duty machining, the VT 260 is equipped with an integrated self-loading system, yet it gets by with a small foot print. High productivity, high repeat accuracy and good operability are the impressive product features that characterize this machine. The turning machine has an integrated pick-up system and self-loads chuck parts with a diameter of up to 260 mm, thus saving the user the additional costs and programming time involved with the use of an automated unit. The VT 260 is also ideally equipped from a control perspective: the customer can choose between the new Fanuc 31i-B or the Sinumerik 828D (optionally Siemens 840D sl), convincing with simple programming and operation.

[Work area]

- Optimized access to the work area
- Best ergonomics for operators

[Main spindle]

- Powerful main spindle with a high torque for short cycle times

[Control]

- Optionally with Siemens 828D or Fanuc 31i-B
- Simple programming and operation thanks to the state-of-the-art control technology

[Right-hand machine]

[Automation]

- Quick loading through direct pick-up of raw materials from the conveyer belt using the spindle (pick-up concept)
- Variable automation possible: The conveyer belt is not permanently integrated in the machine.

[Tool turret]

- 2 independent tool systems:
- VDI40 12-position turret with and without a milling drive
- Multifunctional plate for stationary boring tools, special tools in the VT 260, VT 260 M and VT 260 M (ISM)

[Engineering]

Highlights

- Designed for heavy-duty machining
- Small footprint
- Integrated self-loading system
- Right and left machine available
- Latest Siemens control unit
- Straight chip fall
- Optional driven tools and Y axis
- Made in the Heart of Europe

Options

- Machine status lamp
- Coolant pistol
- Oil mist separator
- Electric cabinet air conditioning system
- Linear scales
- NC control Fanuc 31i-B with chip conveyor at the rear side

Power

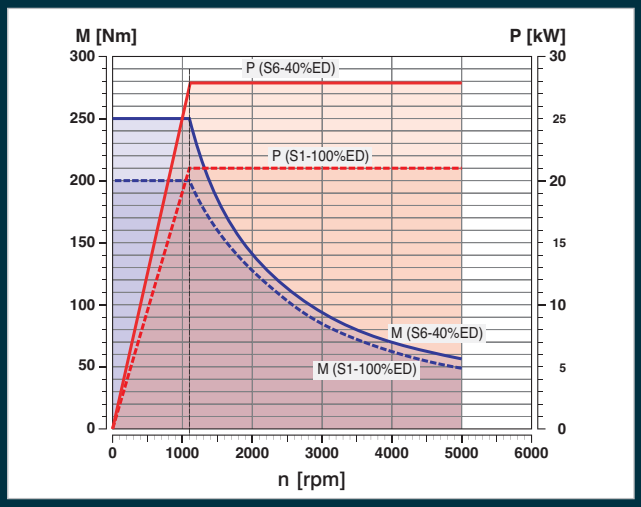

Motor characteristics for main spindle with integrated spindle motor

EMCO VERTICAL VT 260 VERSIONS

EMCO VERTICAL VT 260 (ISM) – Basic machine without driven tools and integrated spindle motor

EMCO VERTICAL VT 260 M (ISM) – Basic machine with driven tools and integrated spindle motor

EMCO VERTICAL VT 260 MY (ISM) – Basic machine with driven tools, Y axis and integrated spindle motor

EMCO VERTICAL VT 400

The new VT 400 for chuck parts up to 400 mm completes the series of EMCO vertical lathes. This compact and robust vertical machine has all the features of a modern production lathe. It comes, for instance, with a compact guideway concept, a linear measuring system and digital drive technology, which enables high-quality parts to be machined.
The VT 400 is used in the light truck or utility vehicle industry, in the manufacture of gearboxes, and in the production of brake disks and hubs. With its +/- 90 mm Y axis and its high-performance driven tools combined with the multifunctional plate, this machine is designed for the complete machining of large and heavy parts. This machine concept allows very efficient handling times to be achieved.

[Main spindle]

- Powerful, high-torque synchronous spindle
- Thermally symmetrical headstock design for high-quality precision machining with a high degree of process reliability

[Work area]

- Generously sized machining compartment
- Easy to change over and user-friendly
- Optimum access to the clamping device tools and workpieces

[Control system]

- Easy programming and operation thanks to modern control technology: Sinumerik 828D including ShopTurn interactive programming and Sinamics drives

[Automation solutions]

- Simple automation solutions that are easy to change over
- Moving frame, pallet conveyors, chain conveyor belts, etc.
- Pick-up system for the parts

[Tool system]

- 12-position tool turret with VDI40, with or without driven tools
- Drilling and milling units can be loaded on all 12 stations
- Use of the multifunctional plate for additional tools

[Chip conveyor]

- Optimum chip outfeed guaranteed
- Chip conveyor (hinged belt) with integrated coolant system included in the basic machine

[Engineering]

Highlights

- Robust, thermally stable machine concept
- Latest drive technology from Siemens
- Integrated spindle motor with 600 Nm
- Linear guides size 55/45 for maximum stability
- Digital drive technology and high traverse speeds to reduce main and ancillary times
- Machining compartment that is easy to change over and easily accessible
- +/- 90 mm Y axis
- Multiple automation options
- Attractive price-performance ratio

Options

- Workpiece measurement
- Process monitoring
- Multifunctional plate for complete machining
- Linear scales
- Oil mist seperator
- Automation is possible till DM 400 mm

Power

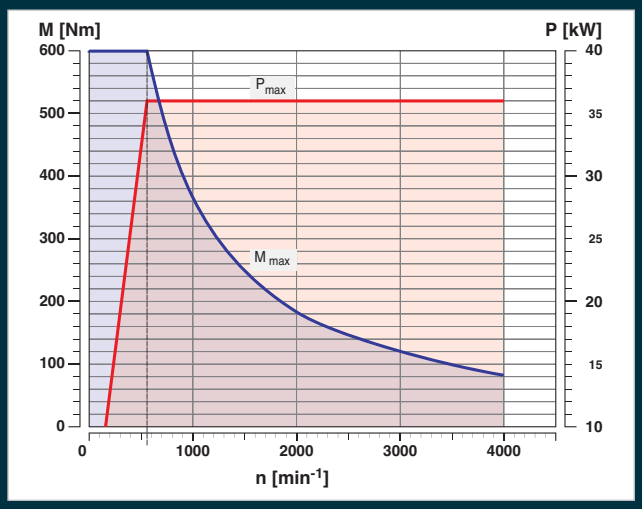

Motor characteristics for main spindle

EMCO VERTICAL VT 400 VERSIONS

EMCO VERTICAL VT 400 M (ISM) - Basic machine with driven tools and integrated spindle motor

EMCO VERTICAL VT 400 MY (ISM) - Basic machine with driven tools, Y axis and integrated spindle motor

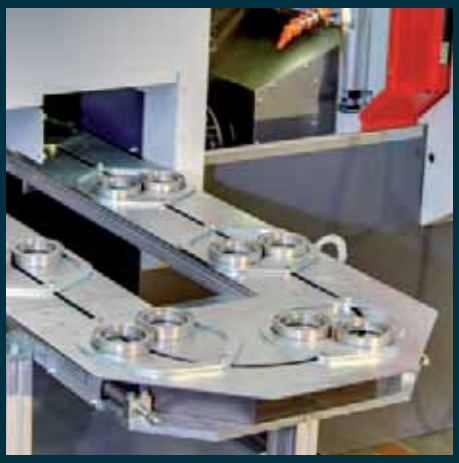

VT 160 with two track loading. Two track loading is possible up to a part diameter of 100 mm.
The benefits for you: good parts supply, short chip-to-chip times up to 5.5 seconds.

Complete machining without compromises: The large stroke of the Y axis satisfies every wish during complete machining.
VT 400: Y-axis +/- 90 mm
VT 260: Y axis +70/-90 mm
VT 160: Y axis +/- 65 mm

Very stable multifunctional plate. In the version without a Y axis, it also supports the use of long drilling tools.

Because of the completely closed work area it is possible to integrate an exhaust system. The oil and water particles are removed from the work area. Only clean filtered air can get out of the machines.

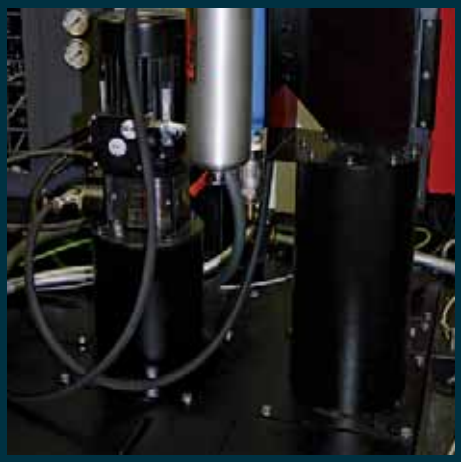

The standard coolant system contains a 14 bar pump which delivers the coolant to the tool tip via the tool turret. It optionally comes with a chip flushing system for cleaning the inside of the machines of chips; a coolant pistol or coolant through the spindle can be added.

The machines can be equipped with different conveyer belts. One possibility is the standard linking system from pallet belts with spring-operated pick up stations, including 20 workpiece carriers. The feed direction is counter-clockwise. The belt is placed completely under the machines.

V-belt pulley (steel)

Wheel hub (steel)

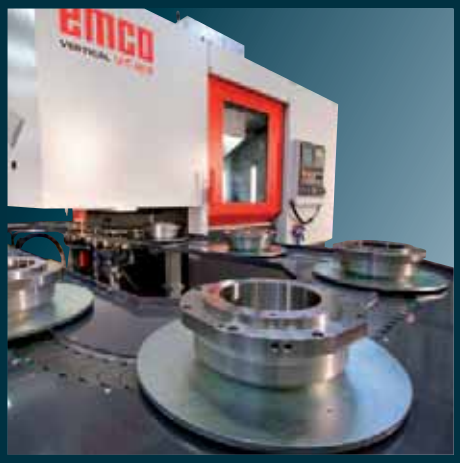

VT 400: The pallet system of the VT400 is designed to hold up to 15 parts with a diameter of 50 – 320 mm. As an alternative, a conveyor belt with carrier-prism can be offered. This can hold 12 parts with a diameter of 200 – 320 mm.

The state-of-the-art 828D control contains the latest functions from the Siemens „Operate“ controller interface. Based on „solution line technology“, the 828D is an ideal solution for single-channel machines like the VT 400, VT 260 and the VT 160. The communication with the controller is possible via a USB or ethernet-interface or CF-card in the front of the controller.

Integrated work piece measuring device: With the touch probe mounted between the work area and the loading position it is possible to gauge the work piece. During machining, the probe will be completely covered and protected from chips and coolant.

Stackable tool magazines for line production are the preferred solution for vertical machines alongside drag conveyors and pallet systems. This magazine with 10 individual stackable magazines is ideal for circular parts such as clutch plates, synchroniser rings, etc. Each magazine shaft can stack up to 60 parts, transporting 600 parts to the VT 160 vertical machine.

Belt pulley (steel)

Plate flange (steel)

Duo cell VT 160 and VT 260

For more productivity: both the purchasing price and the performance values, such as the cycle time, use of manpower, etc., show the great efficiency of this right-hand and left-hand vertical turning machine in their interplay. Workpieces can be fully machined, independently of one another in the two separate workspaces – in other words, identical and different production processes are possible. The two machines are connected by a turning station. The two separate workspaces offer greater flexibility and safety in production processes. The Y axis, driven tools and multifunctional plate offer ideal preconditions for complete machining without any compromises.

[Main spindle]

- Powerful main spindle with a high torque for short cycle times

[Work area]

- Optimized access to the work area
- Best ergonomics for operators

[Tool turret]

- Turret equipped with 12 tool holder fixtures (stationary and driven tools available)
- Multifunctional plate for stationary boring tools, milling unit and special tools in the model range of VT-machines

Highlights

- Right- and left-hand machines
- Complete machining (OP 10+OP 20) for maximum flexibility
- Tooling-friendly workspaces
- Stable guideway concept (BG 45) on the X and Z axis
- 12 station turret with driven tools
- Transfer unit with 180° turning device

Performance

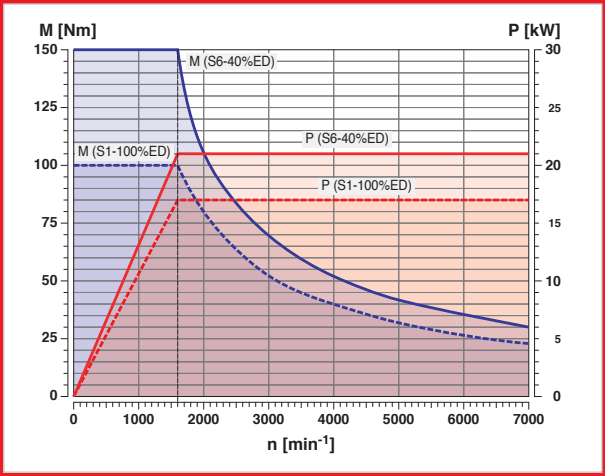

Motor characteristics for hollow spindle motor

[Control]

- Simple programming and operation thanks to the state-of-the-art control technology
- Sinumerik 828D with Shopturn dialog programming and Sinamics drives

VT160 / 260 DUO - all technical challenges involved in 2-sided machining have been resolved here:
- Workpiece 1 is rotated through 180° downstream of OP 10 and deposited on the same pallet.
- Workpiece 2 is rotated through 180° downstream of OP 10 and deposited on pallet 2 for OP 20.
- Different workpieces, workpiece 1 on OP 10/machine 1, workpiece 2 to OP 20/machine 2.

180° workpiece turner with workpiece switch for pallet 1 and pallet 2.

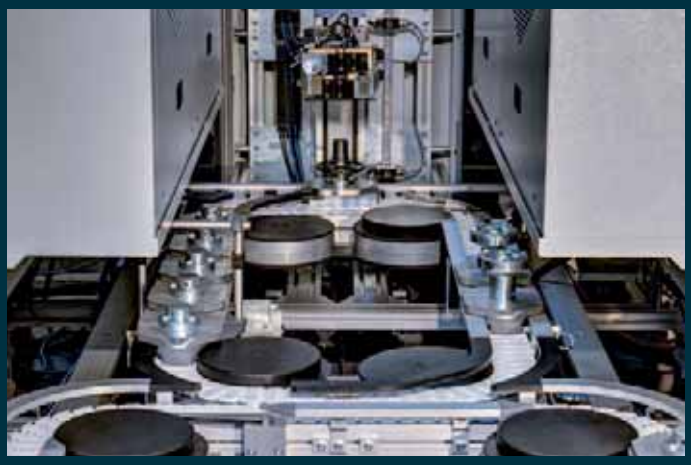

An integrated bypass line allows both simultaneous production of different workpieces, and different voltages for OP 10 and OP 20.

The machine is equipped with a 180° workpiece turner and a lifting station (lift height 300 mm). It can be operated pneumatically by a fixed stop or electrically by a NC axis. The gripper stroke is designed for diameters up to 220 mm. The turning station has a pneumatic drive.

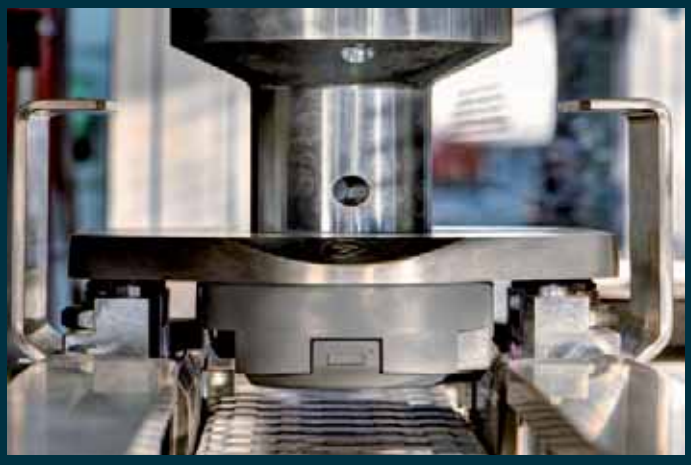

The pick-up station for the blank is designed with gimbal suspension and drive-over protection.

The DUO VT is available as a meander design, which is equipped with a 180° turner and an optional switch. Up to 25 pallets can be used per operation. Separate controls exist for different operating modes (manual, setup, automatic).

Changes and enhancements are possible thanks to requirements-driven configuration options in terms of the production environment, line layout and automation with extremely simple handling. A footprint of 21 m² is sufficient for this.

180° turning station with transport chain and workpiece carrier for the OP 20.

180° turning station, turning process completed:
Workpiece carrier for the OP 10 without a workpiece moves back via a switch for loading with blanks.
Workpiece carrier for the OP 20 with workpiece moves to processing of the second operation.

Layout pallet transport OVAL

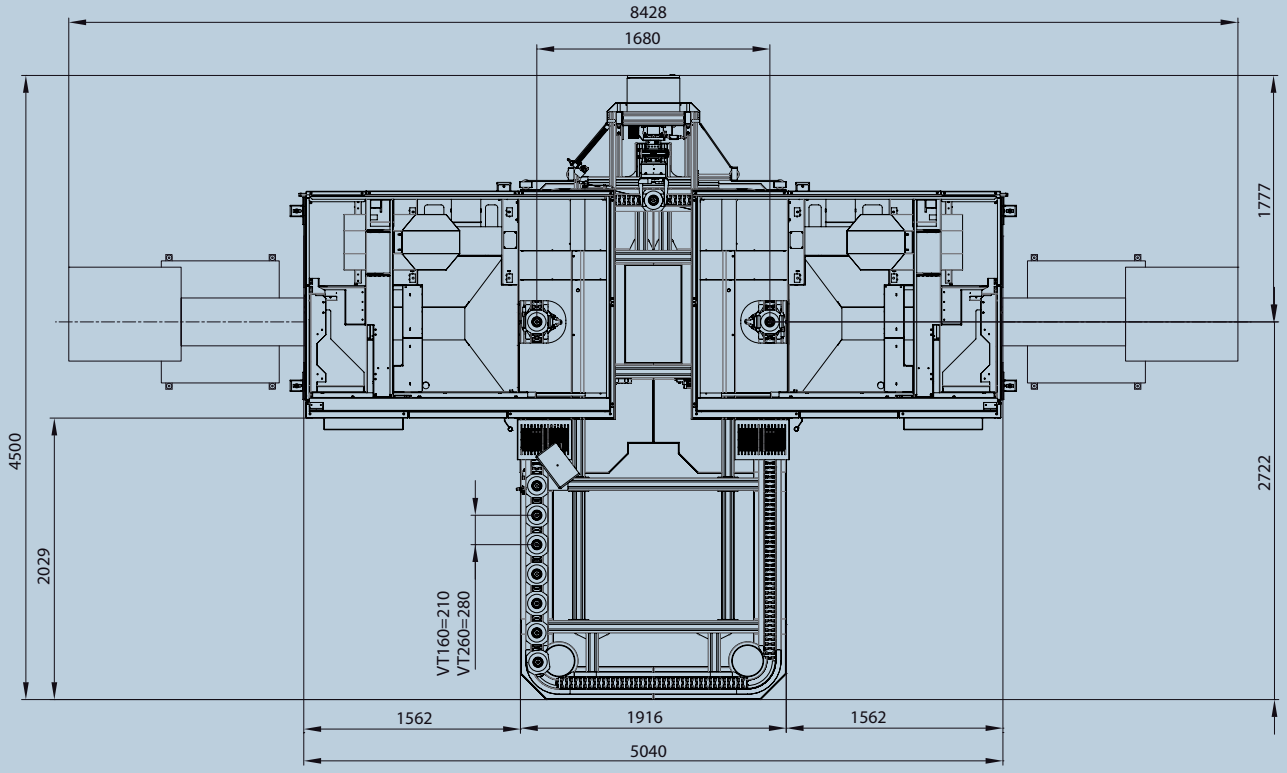

Details in millimeters

Layout pallet transport MR and MRW

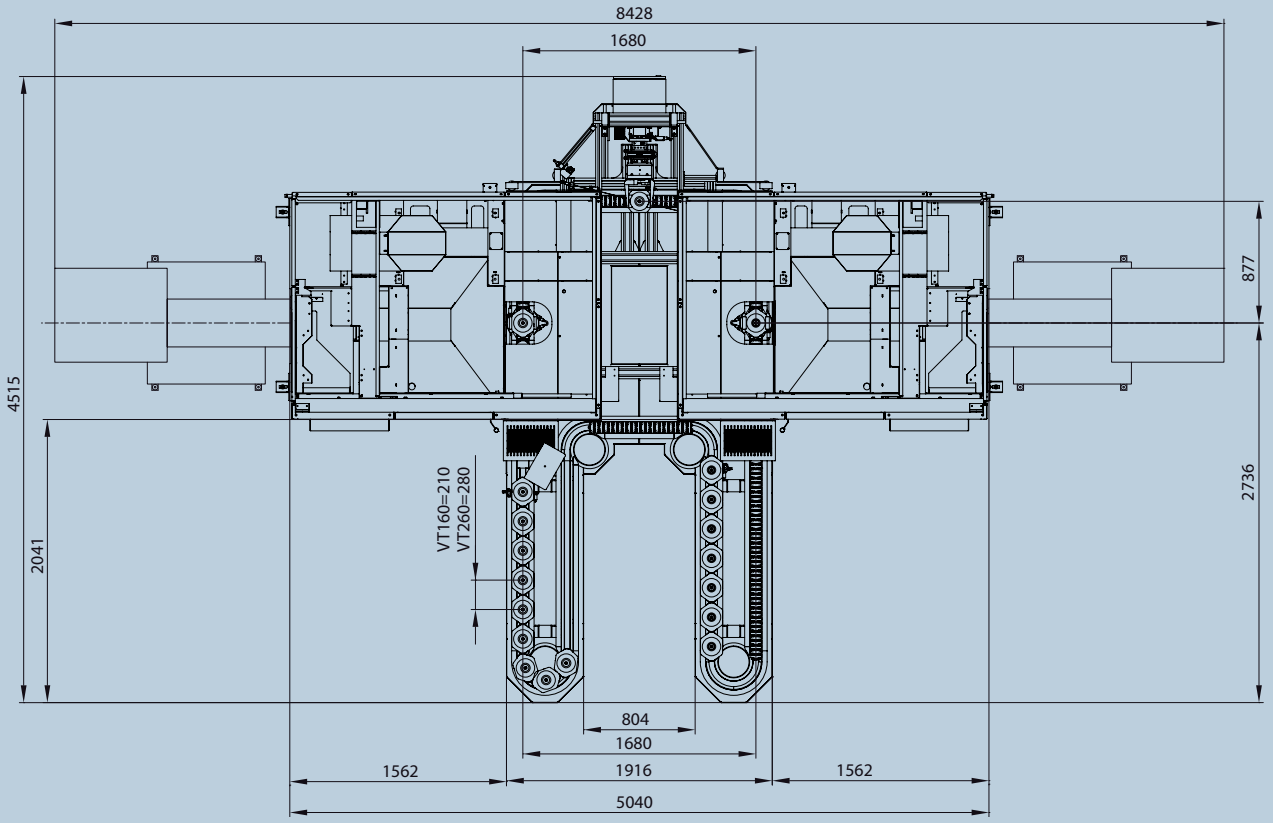

Details in millimeters

Workspace VT 160

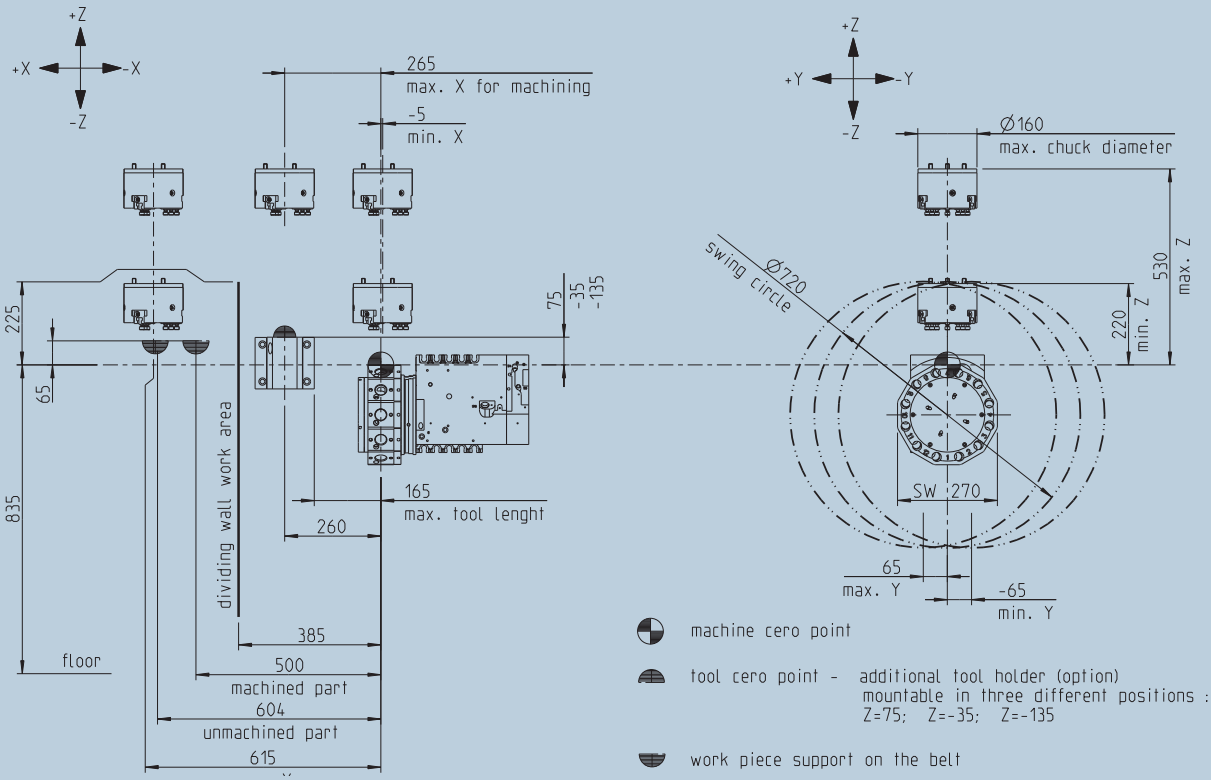

Details in millimeters

Installation plan VT 160

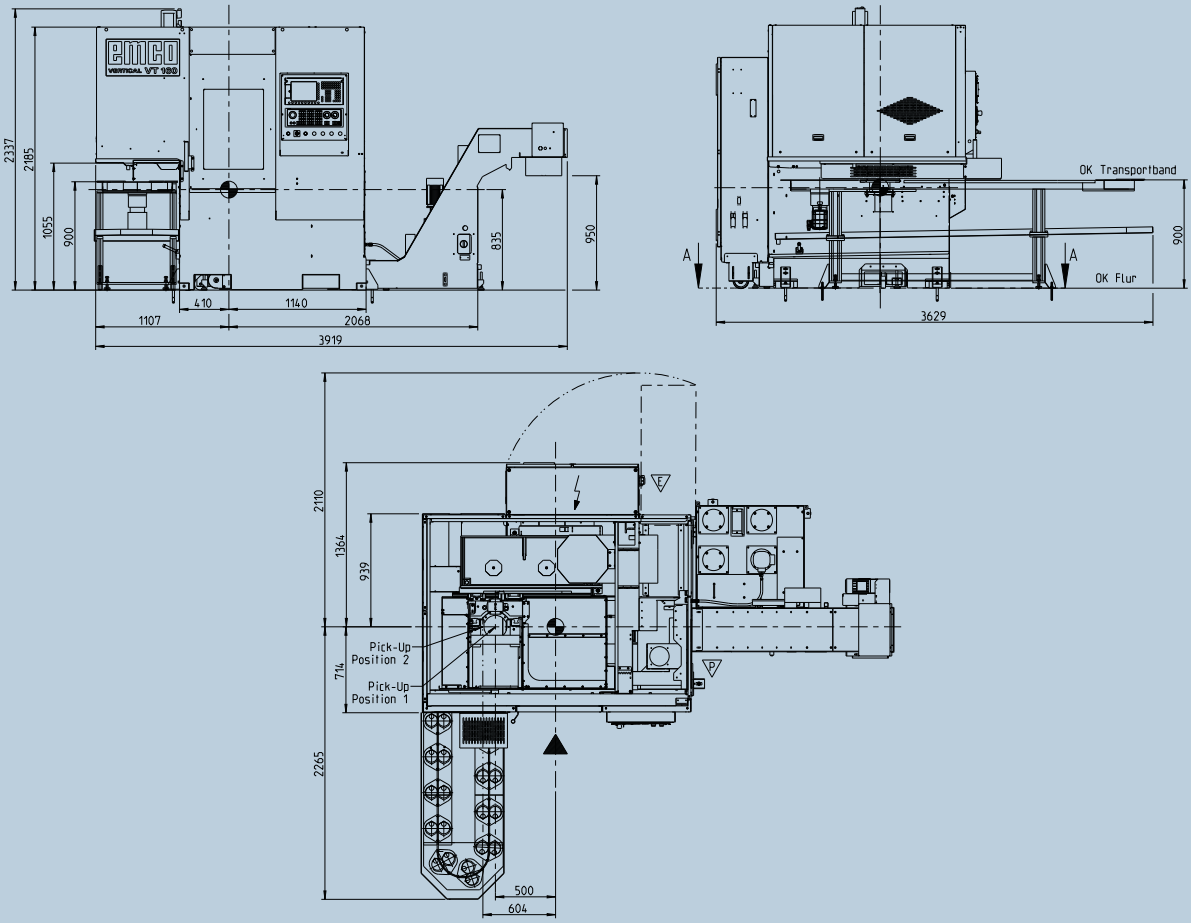

Details in millimeters

Workspace VT 260

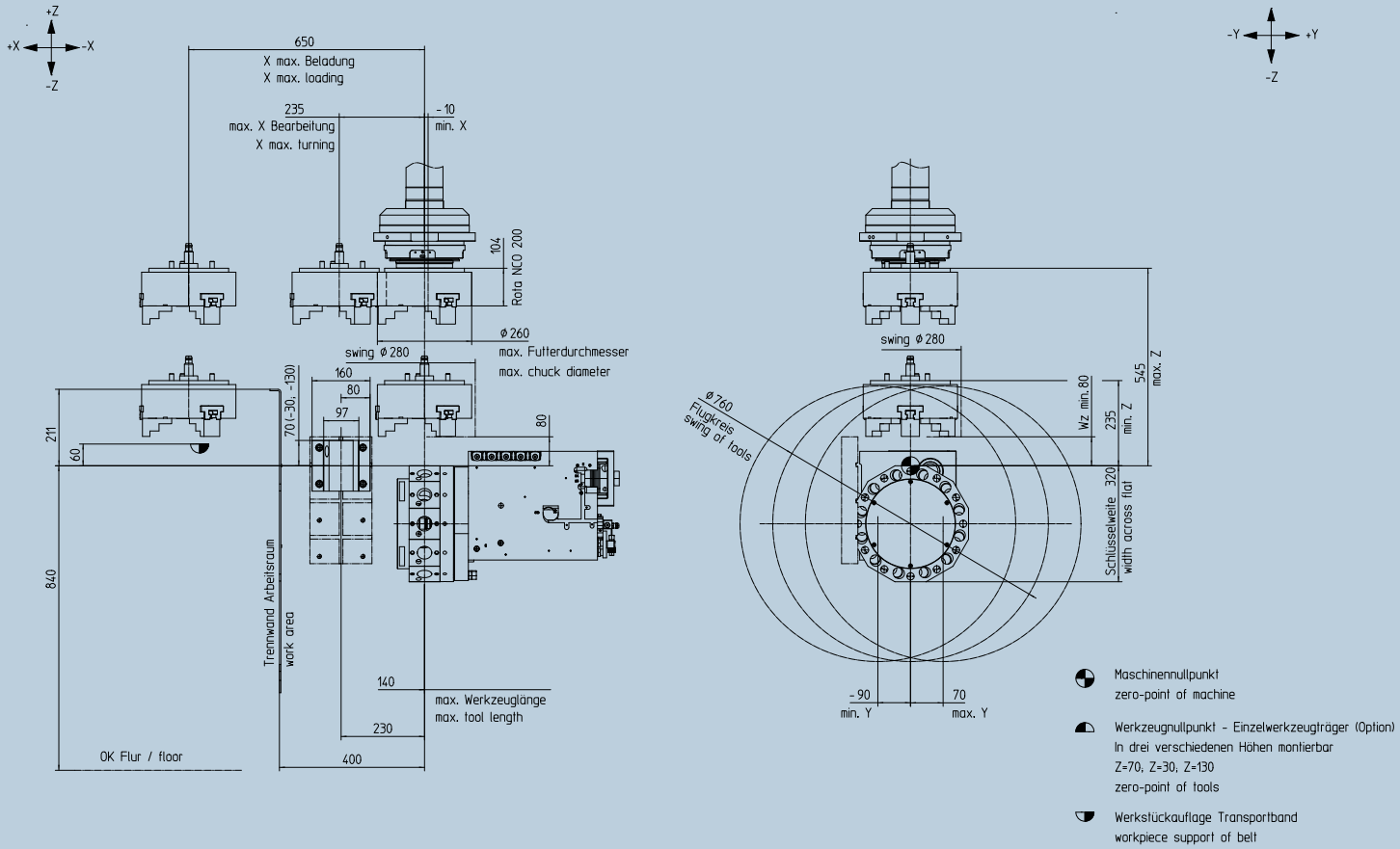

Installation plan VT 260 with Siemens control

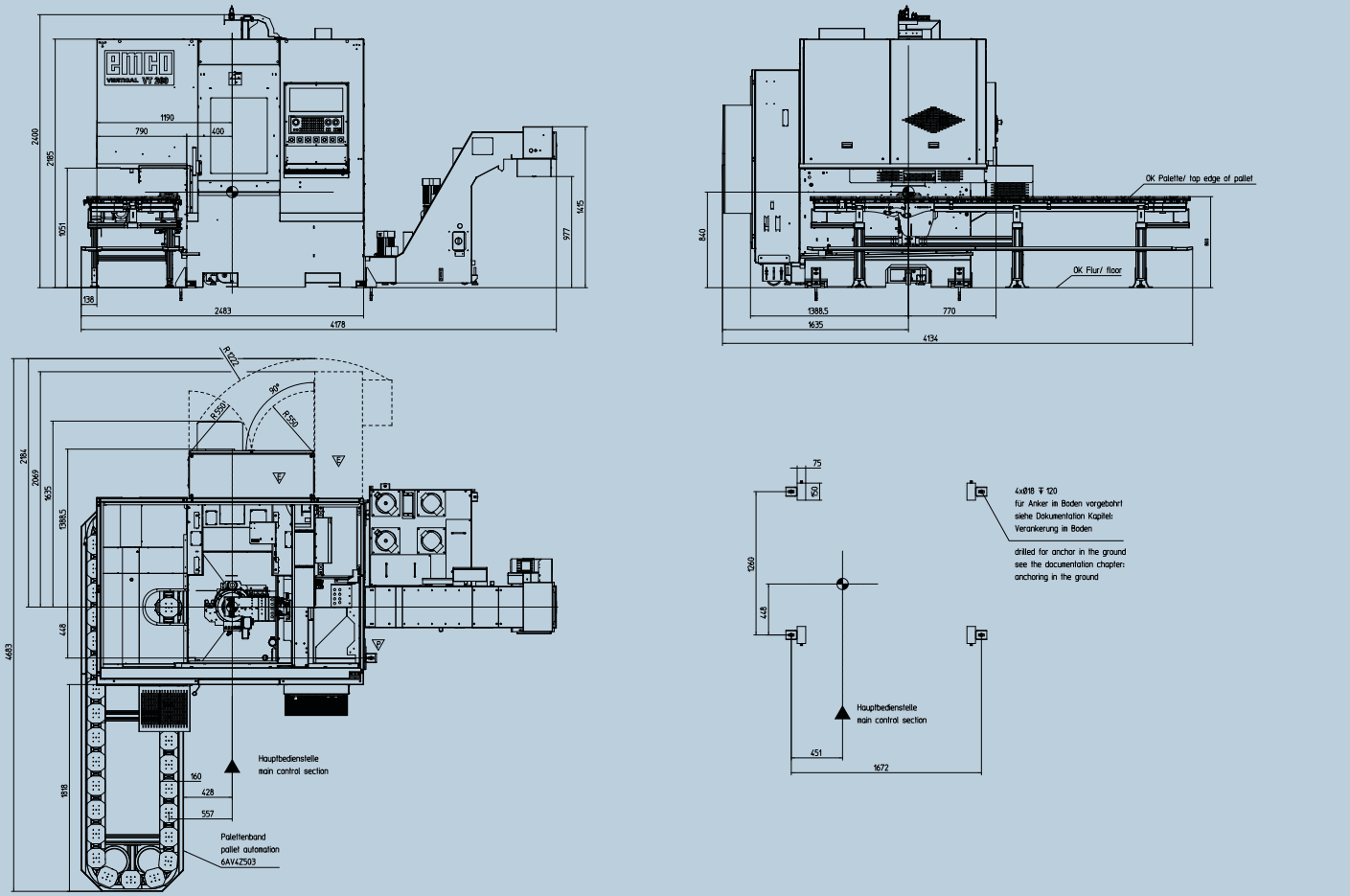

Details in millimeters

Installation plan VT 260 with Fanuc control

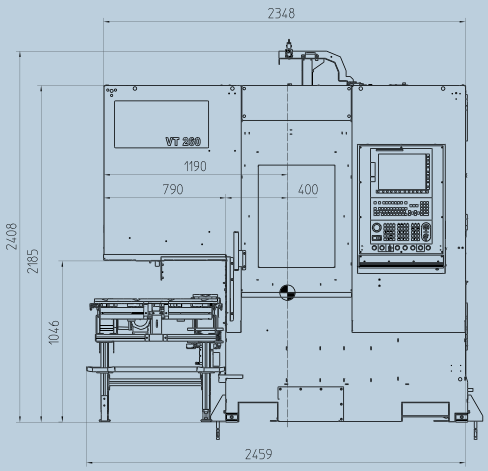

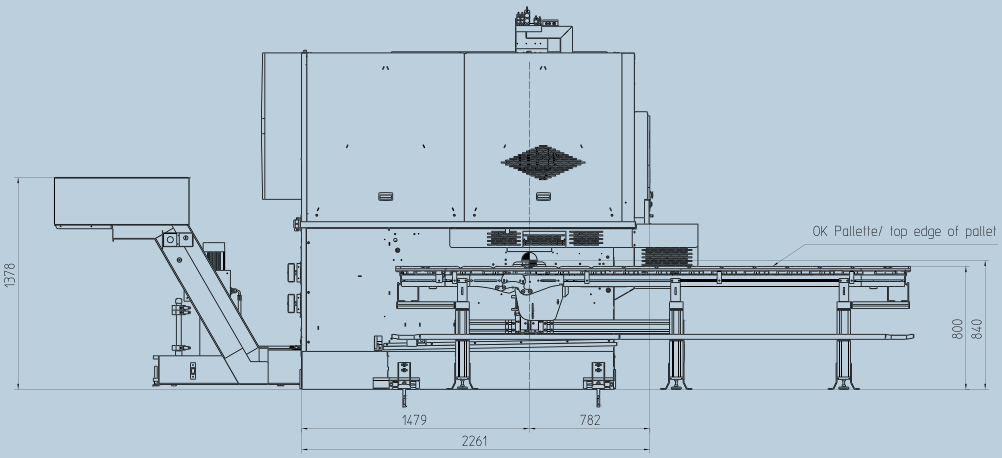

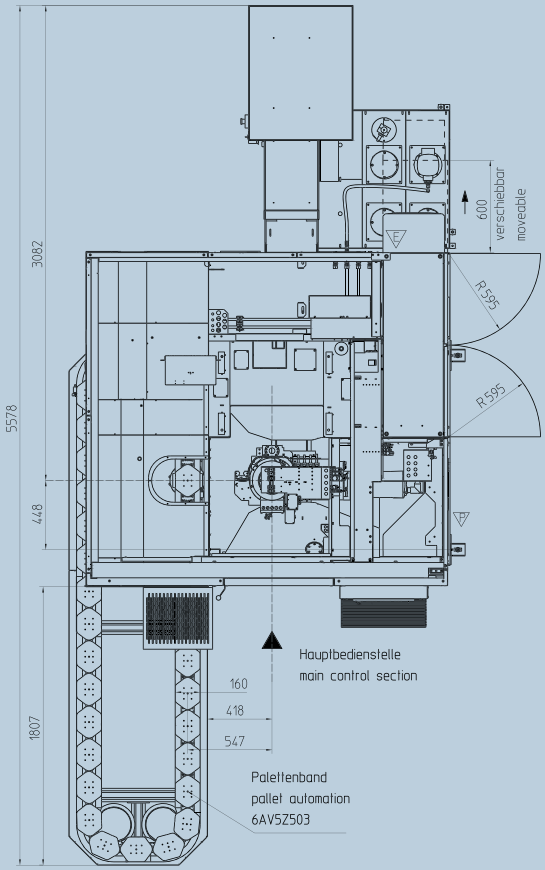

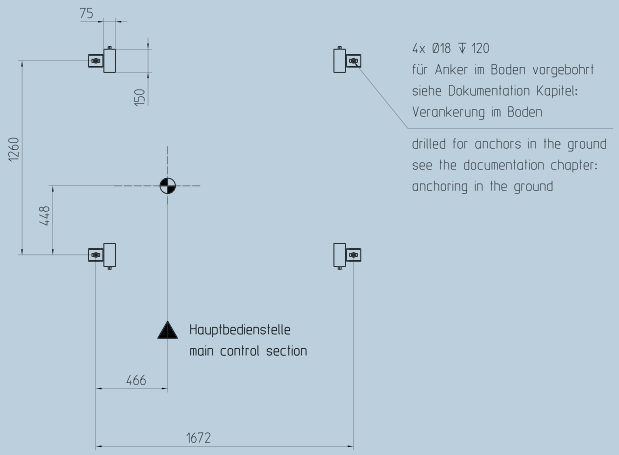

Details in millimeters

Workspace VT 400

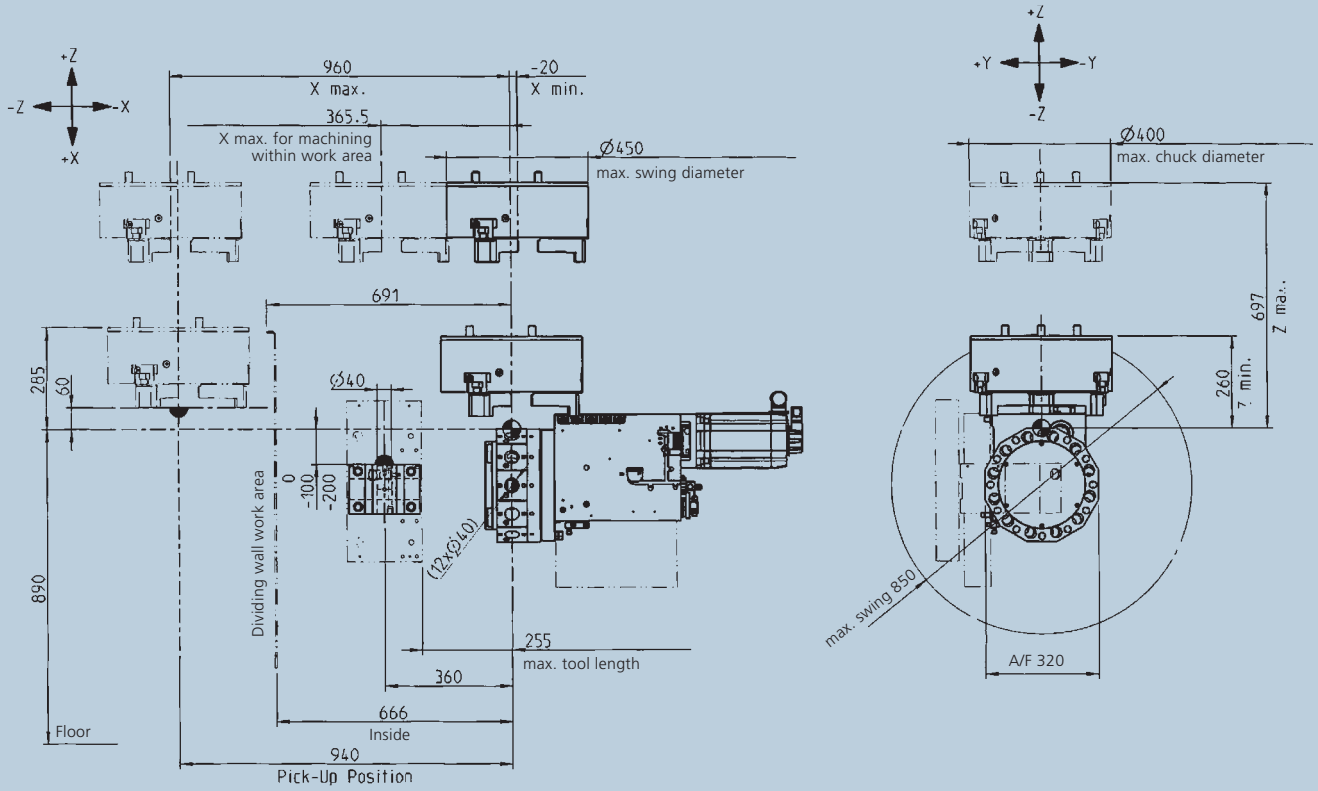

Details in millimeters

Installation plan VT 400

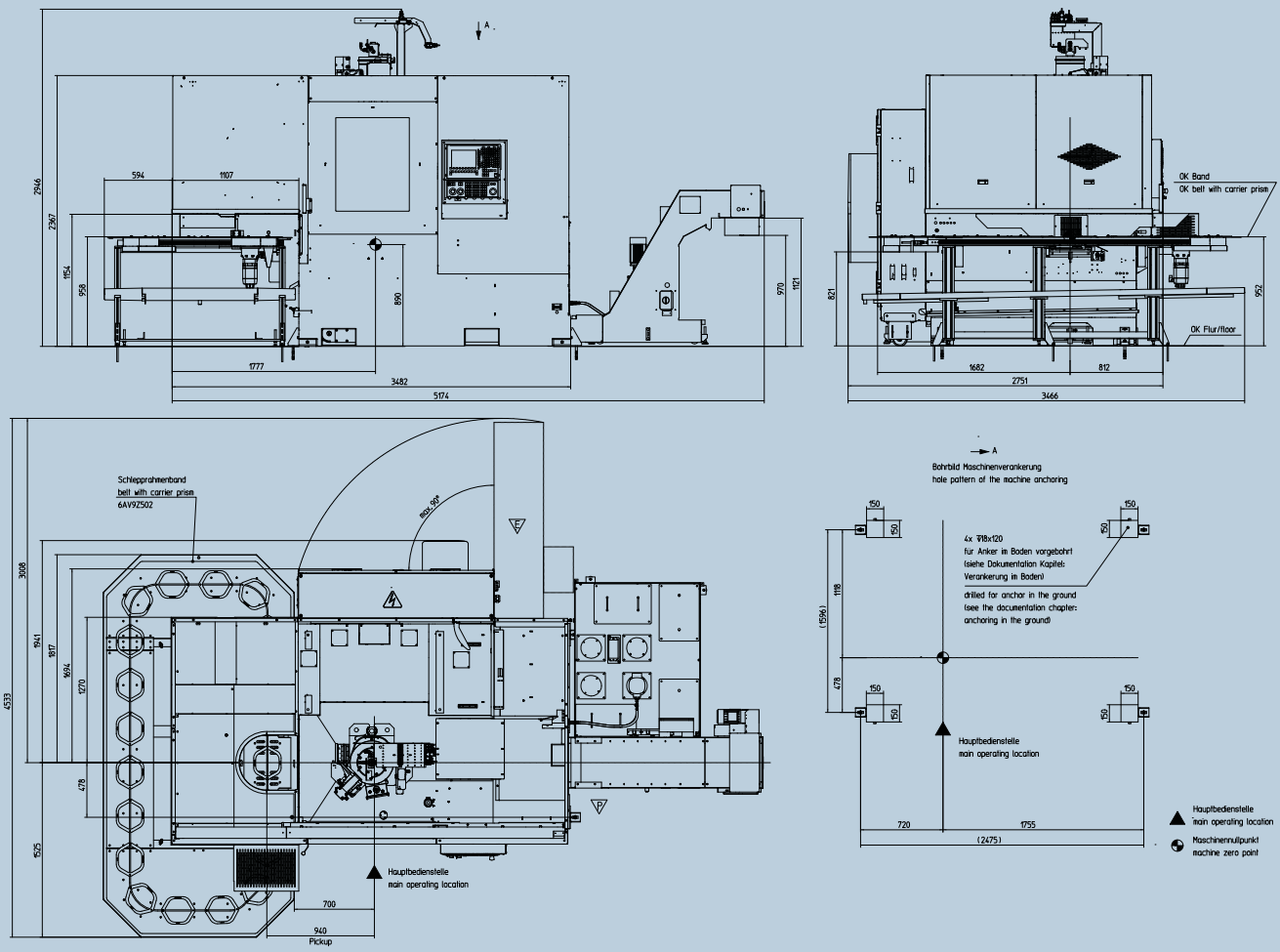

Details in millimeters

[Technical data]

Work area	EMCO VERTICAL VT 400	EMCO VERTICAL VT 260	EMCO VERTICAL VT 160
Chuck size	400 mm	260 mm	160 mm
Maximum work piece diameter	400 mm	260 mm	160 mm
Maximum work piece length	200 mm	180 mm	150 mm
Travel			
Travel X / Y / Z axis	960 / +- 90 / 400 mm	660 / +70 -90 / 310 mm	620 / +- 65 / 310 mm
Rapid motion speed X / Y / Z	45 / 15 / 30 m/min	60 / 15 / 30 m/min	60 / 15 / 30 m/min
Main spindle - ISM			
Speed range	0 – 4000 rpm	0 – 5000 rpm	0 – 7000 rpm
Drive power	36 kW (48.3 hp)	29 kW (38.9 hp)	21 kW (28.2 hp)
Torque	600 Nm (442 ft·lbs)	280 Nm (207.2 ft·lbs)	150 Nm (36.8 ft·lbs)
Spindle nose / DIN 55026	A2-11	A2-6	A2-5
Tool turret			
Number of tool holders	12	12	12
Tool shaft according VDI (DIN 69880)	VDI40	VDI40	VDI30
Driven tools	12	12	12
Speed range	0 – 4000 rpm	0 – 4000 rpm	0 – 5000 rpm
Drive power	8,5 kW (11.4 hp)	8.5 kW (11.4 hp)	6.7 kW (9.0 hp)
Torque	40 Nm (29.50 ft·lbs)	40 Nm (29.50 ft·lbs)	25 Nm (18.4 ft·lbs)
Coolant system			
Tank volume	320 litres (85 gal)	230 litres (60 gal)	230 litres (60 gal)
Coolant pressure standard / optional	3.7 / 14 bar (50 psi)	3.7 / 14 bar (50 psi)	3.7 / 14 bar (50 psi)
Dimensions and weight			
Overall height	2940 mm	2400 mm	2360 mm
Floor space L x D (w/o chip conveyor and part feeder)	3482 x 2511 mm	2350 x 2200	2240 x 2185 mm
Machine weight	8500 kg (18740 lb)	4000 kg (8818 lb)	3400 kg (7500 lb)

PALLET TRANSPORT

Pallet transport Duo (Oval)	VT160	VT260
Processing	OP10 / OP20	
Workpiece diameter	160 mm	260 mm
Workpiece height	150 mm	180 mm
Loading/pallet	8 kg (17.6 lb)	
Storage and buffering capacity	15 pallets / OP	
Workpiece turning device Vertical axis (Z)	adjustable fixed stop	
Control unit	Siemens	
Operation	6“ Touch-Panel	
Pallet transport Duo (MR)		
Processing	OP10 / OP20	
Workpiece diameter	160 mm	260 mm
Workpiece height	150 mm	180 mm
Loading / pallet	8 kg (17.6 lb)	
Storage and buffering capacity	25 pallets / OP	

Pallet transport Duo (MR)		
Workpiece turning device Vertical axis (Z)	adjustable fixed stop	
Control unit	Siemens	
Operation	6“ Touch-Panel	
Pallet transport (MRW)		
Processing	OP10 / OP20 part A and B	
Workpiece diameter	160 mm	260 mm
Workpiece height	150 mm	180 mm
Loading/pallet	8 kg (17.6 lb)	
Storage and buffering capacity	25 pallets / OP	
Workpiece turning device Vertical axis (Z)	NC axis	
Control unit	Siemens	
Operation	6" Touch-Panel	

Designed for your profit

EN4001 07/16 Technische Änderungen vorbehalten. Keine Haftung für Druck- und Satzfehler.

EMCO GmbH
Salzburger Str. 80 · 5400 Hallein-Taxach · Austria
Tel. +43 6245 891-0 · Fax +43 6245 86965 · info@emco.at

EMCO Magdeburg GmbH
Gröperstraße 18 · 39124 Magdeburg · Germany
Phone +49 391 2440 · Fax +43 391 244283 · info@emco-magdeburg.de

www.emco-world.com